DMB HK Limited
Doing Major Business

PRODUCT

ELECTRIC SCOOTER

i11	i9
i6	i7
i8	Y8
S3	S5
K6	C1

ELECTRIC SKATEBOARD

- SK1
- SK2
- SK3 - Carbon Fiber
- SK4

OTHER PRODUCTS

- Q5 - Balance Scooter
- V5 - Kids Scooter
- HM8 - Smart Helmet

NEW PRODUCTS

- N-YJC01 - Wheelchair
- Y1 - Electric Scooter



35/F., Central Plaza, 18 Harbour Road. Wanchai - Hong Kong
Telephone: +852 2824 8140 WhatsApp: +852 6778 9546 Wechat: +86 130 2881 9456 Web: www.dmb-hk.com

i11

6" Electric Scooter





colour:

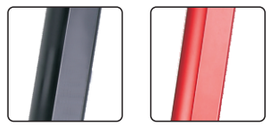

PARAMETERS

Product name:	i11	Material:	Aluminum
Weight:	8.5kg	Max Load:	100kg
Open Size:	970*200*1170mm	Folding Size:	970*200*480mm
Max Speed:	20km/h	Max Mileage:	15km
Battery:	5.0Ah Lithium Battery	Motor:	250w
Charging time:	3-5H	Max Incline:	15°

i9

8.5" Electric Scooter





colour:



PARAMETERS

Product name:	i9	Material:	Aluminum
Weight:	10kg	Max Load:	120kg
Open Size:	1060*1110*430mm	Folding Size:	1060*450*430mm
Max Speed:	25km/h	Max Mileage:	30km
Battery:	7.8Ah Lithium Battery	Motor:	250w
Charging time:	3-5H	Max Incline:	20°



i6

Aluminum Electric Scooter

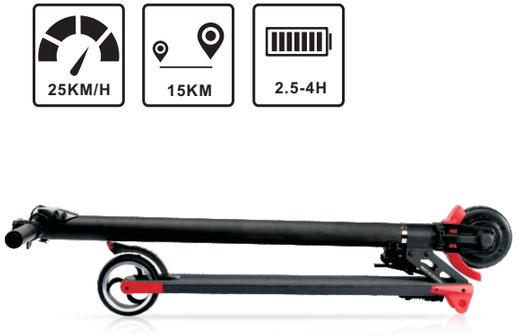

colour:

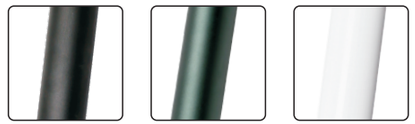

PARAMETERS

Product name:	i6	Material:	Aluminum
Weight:	8.5kg	Max Load:	120kg
Open size:	920*405*1000mm	Folding size:	1000*405*235mm
Max Speed:	25km/h	Max Mileage:	15km
Battery:	5.2Ah Lithium Battery	Motor:	250w
Charging time:	3-5H	Max Incline:	20°



i7

Height Adjustable E- Scooter



colour:

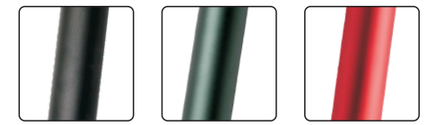

PARAMETERS

Product name:	i7	Material:	Aluminum
Weight:	8.9kg	Max Load:	120kg
Open Size:	920*480*1030mm	Folding Size:	1030*480*200mm
Max Speed:	25km/h	Max Mileage:	15km
Battery:	5.2Ah Lithium Battery	Motor:	250w
Charging time:	3-5H	Max Incline:	20°



i8

Aluminum Electric Scooter

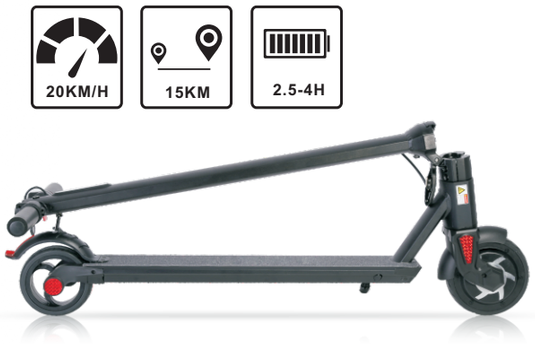

colour:

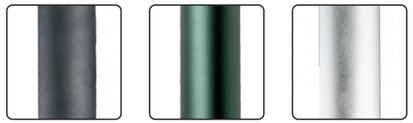

PARAMETERS

Product name:	i8	Material:	Aluminum
Weight:	8.5kg	Max Load:	100kg
Open Size:	920*480*1060mm	Folding Size:	940*405*235mm
Max Speed:	20km/h	Max Mileage:	15km
Battery:	5.2Ah Lithium Battery	Motor:	250w
Charging time:	3-5H	Max Incline:	15°



Y8

8" Electric Scooter



colour:



PARAMETERS

Product name:	Y8	Material:	Aluminum
Weight:	10kg	Max Load:	100kg
Open Size:	1320*1050*420mm	Folding Size:	1320*420*320mm
Max Speed:	25km/h	Max Mileage:	15km
Battery:	5.2Ah Lithium Battery	Motor:	250w
Charging time:	3-5H	Max Incline:	20°



S3

Carbon Fiber Electric Scooter



colour:

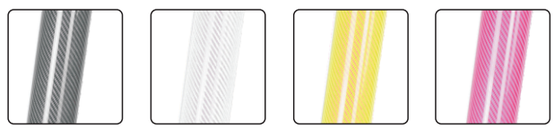

PARAMETERS

Product name:	S3	Material:	Carbon Fiber
Weight:	8.5kg	Max Load:	120kg
Open Size:	920*405*1000mm	Folding Size:	1000*405*235mm
Max Speed:	25km/h	Max Mileage:	25km
Battery:	10.4Ah Lithium Battery	Motor:	250w
Charging time:	3-5H	Max Incline:	20°



S5

Dual Motor Electric Scooter

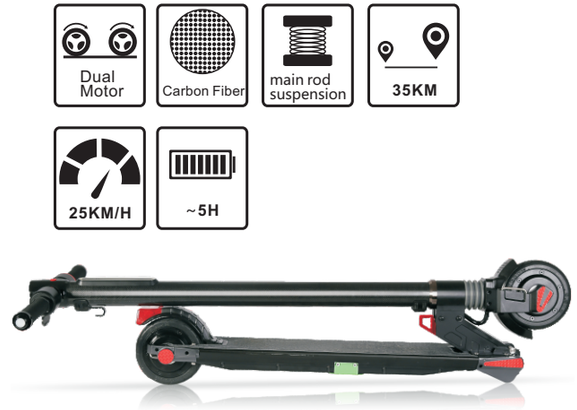

colour:



PARAMETERS

Product name:	S5	Material:	Carbon Fiber + Aluminium
Weight:	11.5kg	Max Load:	120kg
Open Size:	1160*940*130mm	Folding Size:	1070*235*130mm
Max Speed:	25km/h	Max Mileage:	35km
Battery:	10.4Ah Lithium Battery	Motor:	250w×2
Charging time:	3-5H	Max Incline:	20°

K6

Aluminum Electric Scooter





colour:

PARAMETERS

Product name:	K6	Material:	Aluminum
Weight:	8.6kg	Max Load:	100kg
Open size:	970*410*1100mm	Folding size:	1000*410*390mm
Max Speed:	20km/h	Max Mileage:	15km-30km
Battery:	5.2Ah Lithium Battery	Motor:	250w
Charging time:	3-5H	Max Incline:	15°

C1

8" Electric Scooter





colour:

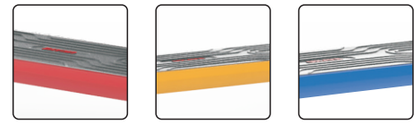

PARAMETERS

Product name:	C1	Material:	Aluminum
Weight:	13.5kg	Max Load:	120kg
Open size:	1037*415*976mm	Folding size:	1130*415*328mm
Max Speed:	25km/h	Max Mileage:	30km
Battery:	7.8Ah Lithium Battery	Motor:	36V/300W
Charging time:	3-5H	Tyres:	8"



ELECTRIC SKATEBOARD

SK 1

Maple E-SKATEBOARD



PARAMETERS

Product name:	SK1	Material:	Grade A Maple Wood
Weight:	3.5kg	Max Load:	100kg
Open size:	740*200*115mm	Skateboard wheels:	PU Tire
Max Speed:	15km/h	Max Mileage:	15km
Battery:	2.0Ah Lithium Battery	Motor:	150W
Charging time:	2H	Max Incline:	15°

SK 2

Maple E-SKATEBOARD





PARAMETERS

Product name:	SK2	Material:	Grade A Maple Wood
Weight:	5.5kg	Max Load:	100kg
Open size:	890*225*115mm	Skateboard wheels:	PU Tire
Max Speed:	25km/h	Max Mileage:	25km
Battery:	4.4Ah Lithium Battery	Motor:	300w
Charging time:	2H	Max Incline:	15°

SK 3

Carbon Fiber E-SKATEBOARD





PARAMETERS

Product Name:	SK3	Material:	Carbon fiber board
Weight:	5.8kg	Max Load:	100kg
Open Size:	940*240*140mm	Skateboard Wheels:	PU Tire
Max Speed:	20km/h	Max Mileage:	35km
Battery:	5.6Ah	Motor:	300W
Charging Time:	3H	Max Incline:	15°

SK 4

E-SKATEBOARD



PARAMETERS

Product Name:	SK4	Material:	7(Layers Maple)+1(Bamboo)
Weight:	10.3kg	Max Load:	150kg
Open Size:	965*230*140mm	Skateboard Wheels:	PU Tire
Max Speed:	35km/h	Max Mileage:	35km
Battery:	5.6Ah	Motor:	2*250W
Charging Time:	3H	Max Incline:	15°

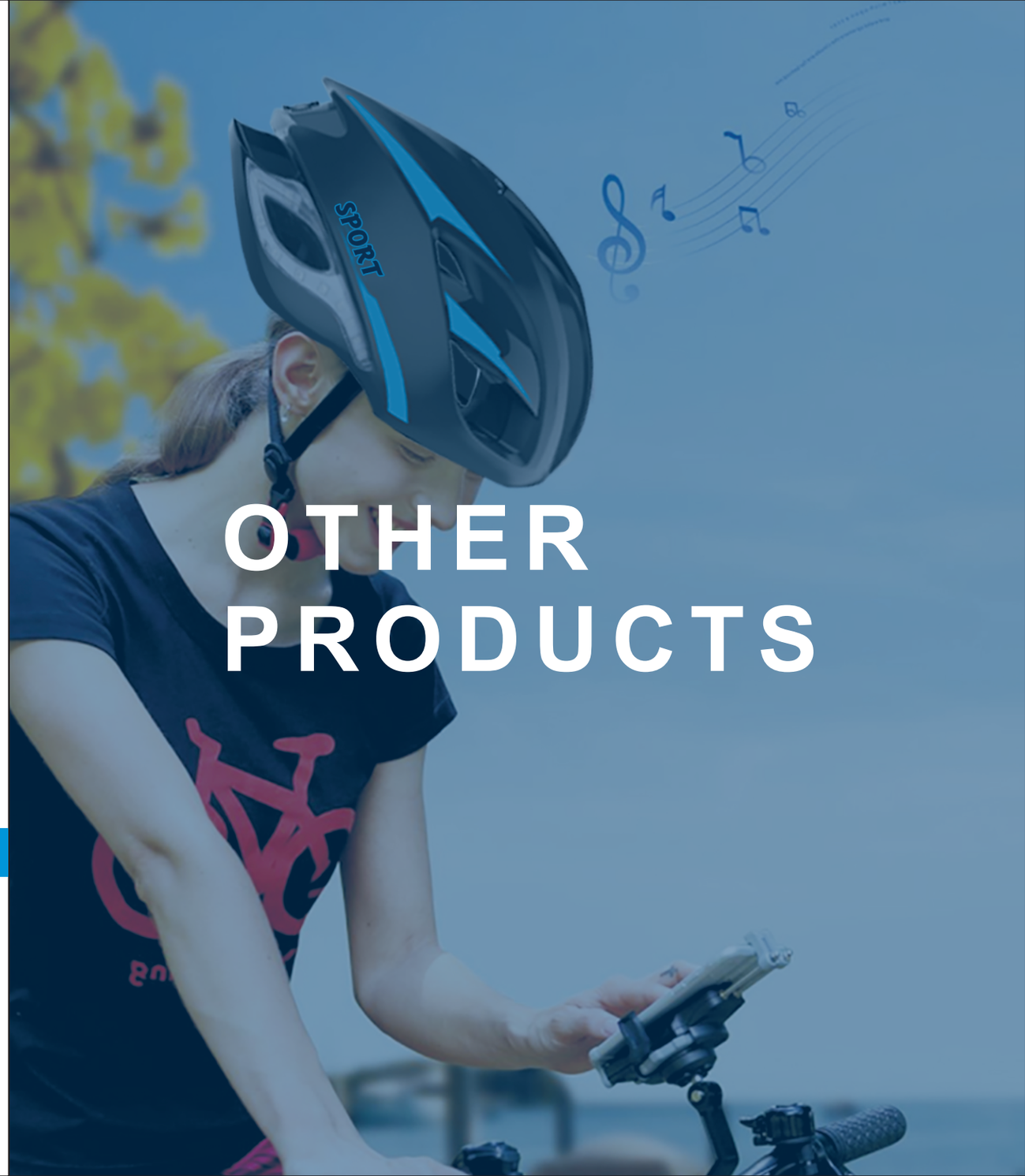

OTHER PRODUCTS

BALANCING SCOOTER

Model:	Q5
Material:	Aluminum alloy
Weight:	13.3kg
Max Load:	100kg
Size:	554*260*605mm
Tire size:	10"
Tire material:	Explosion-proof inflatable rubber tires
Max Speed:	16km/h
Max Mileage:	22km
Battery:	4.0 Ah lithium Battery
Motor power:	350W×2
Charging time:	~4H
Max Incline:	15°

colour:






V5

KIDS SCOOTER







Model: V5

Material: PP+Aluminum Alloy

Spray time: 30 Seconds Each time

Product size: 650*150*350mm

Color: Blue, Red, Rose, Yellow, Black, Green

HM 8

Smart Helmet

Adjustable Fit System | Aerodynamic Design | Integral Molding | Nylon Strap

Rear Light LED×9-
Left and Right indicator



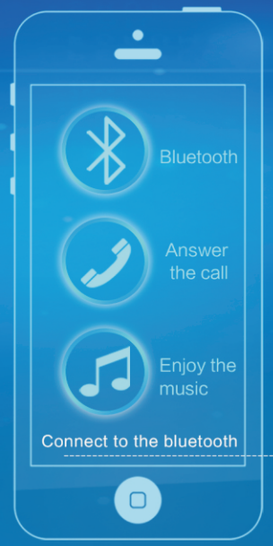



Bluetooth STEREO Speaker
Detachable Cotton Lining





Model:	HM8	Charging Port:	Micro USB
Color:	White、Blue	Charging Input:	5V/1A
Material:	PC+EPS	Battery Capacity:	380mAh
Built-in device:	Microphone, 2*loudspeaker	BT Range:	10M

NEW PRODUCTS

N-YJC01

- Britain imported 360° intelligent electromagnetic induction controller
- Dermis cushion, more comfortable
- 18.2Ah big capacity battery



PARAMETERS

Product name:	N-YJC01	Material:	Aluminum Alloy +PU Foaming
Weight:	49kg	Max Load:	120kg
Open size:	820*600*870mm	Folding size:	820*600*580mm
Max Speed:	6km/h	Max Mileage:	20km
Battery:	18.2Ah Lithium Battery	Motor :	200W
Charging time:	9H	Span height:	50mm

- Height-Adjustable seat
- Front and rear 10 inch of tyres
- 500W strong power motor
- Front and rear dual suspension



PARAMETERS

Product name:	Y1	Material:	Aluminium alloy section
Weight:	17kg	Max Load:	120kg
Open size:	1200*260*1193mm	Folding size:	1200*260*520mm
Max Speed:	25km/h	Max Mileage:	35km
Battery:	10.4Ah Lithium Battery	Motor:	36VDC500W
Charging time:	5H	Max Incline:	20°

Electric Scooter





A Series

Model	A3	A5
Battery	36V 7.8Ah	36V 7.8Ah+5.2Ah
Range	20-30km	30-40km
Max. Speed	25km/h	25km/h
Motor	350W	350W
Frame Material	Magnesium alloy	
Brake	Electronic brake+Foot brake	
Shock absorber-Front	Yes	
Shock absorber-Rear	No	
Tires	8-inch Solid Honeycomb tire	
Max.Load	120kg	120kg
Charging hour	4-4.5h	6.5-7h
Open Size	1030*430*1180mm	1030*430*1180mm
Folding Size	1030*430*480mm	1030*430*480mm
N.Weight(kg)	12.5kg	14.1kg
G.Weight (kg)	15kg	16.6kg
Package Size	1050*170*505mm	1050*170*505mm

*** 20GP /40GP/40HQ capacity : 280 / 640/730pcs .**

A Series









GS Series

Model	GS7	GS9
Battery	48V22AH	52V18AH
Range	70-90km	60-80km
Max. Speed	35km/h	38km/h
Motor	500W	600W
Frame Material	Aluminium alloy	
Brake	Front disc brake,Rear drum brake	
Shock absorber-Front	Yes	
Shock absorber-Rear	Yes	
Tires	9-inch Solid tire	
Max.Load	120kg	120kg
Charging hour	11-12h	9-10h
Open Size	1180*545*1180mm	
Folding Size	1180*470*180mm	
N.Weight(kg)	21.4kg	20.6kg
G.Weight (kg)	24.4kg	23.6kg
Package Size	1130*235*440mm	

*** 20GP /40GP/40HQ capacity : 215 / 475/ 580pcs .**





G Series

Model	G1	G3	G5
Battery	36V 7.8AH	36V 13AH	48V 13AH
Range	20-30km	25-35km	45-55km
Max. Speed	30km/h	30km/h	36km/h
Motor	400W	400W	500W
Frame Material	Aluminium alloy		
Brake	Rear drum brake		
Shock absorber-Front	Yes		
Shock absorber-Rear	Yes		
Tires	9-inch Air tire		
Max.Load	120kg	120kg	120kg
Charging hour	3.5-4h	6.5-7h	6.5-7h
Open Size	1120*560*1245mm		
Folding Size	1050*180*440mm		
N.Weight(kg)	16.5kg	17.05kg	17.8kg
G.Weight (kg)	19.7kg	20.25kg	21.0kg
Package Size	1130*235*440mm		

*** 20GP /40GP/40HQ capacity : 215 / 475/ 580pcs .**



F Series

Model	F1	F3	F3+	F5S+	F7+
Battery	36V 8Ah	36V 13Ah	36V 13Ah	48V 13Ah	48V22Ah
Range	20-25km	30-40km	30-40km	45-55km	70-90km
Max. Speed	30km/h	30km/h	30km/h	36km/h	36km/h
Motor	350W	350W	350W	500W	500W
Frame Material	Aluminium alloy				
Brake	Rear drum brake				
Shock absorber-Front	Yes				
Shock absorber-Rear	No		Yes		
Tires	8-inch Air tire-Front / Solid tire-Rear				
Max.Load	120kg	120kg	120kg	120kg	120kg
Charging hour	4-4.5h	6.5-7h	6.5-7h	6.5-7h	11-12h
Open Size	980*540*1140mm		1080*540*1140mm		
Folding Size	880*180*360mm		980*180*360mm		
N.Weight(kg)	12.9kg	13.5kg	15.0kg	16.0kg	17.5kg
G.Weight (kg)	16.3kg	16.9kg	18.4kg	19.4kg	20.9kg
Package Size	965*190*390mm		1050*220*400mm		

*** 20GP /40GP/40HQ capacity : Without suspension: 360 / 730 / 840pcs .**
With suspension: 280 /560 / 720pcs .

F Series









Y-S Series

Model	Y5-S	Y7-S	Y8-S
Battery	48V13AH	48V 22AH	48V26AH
Range	45-55km	70-90km	90-110km
Max. Speed	38km/h	38km/h	38km/h
Motor	500W	500W	500W
Frame Material	Aluminium alloy		
Brake	Front disc brake,Rear disc brake		
Shock absorber-Front	Yes		
Shock absorber-Rear	Yes		
Tires	10*2.5 10-inch Air tire		
Max.Load	120kg	120kg	120kg
Charging hour	6.5-7h	11-12h	13-14h
Open Size	1200*570*1190mm		
Folding Size	1150*210*380mm		
N.Weight(kg)	23.0kg	25.0kg	26.0kg
G.Weight (kg)	26.5kg	28.5kg	29.5kg
Package Size	1160*250*460mm		

*** 20GP /40GP/40HQ capacity : 180 / 380/ 480pcs .**





X Series

Model	X1	X3	X5S
Battery	36V 8AH	36V 13AH	48V 13AH
Range	20-25km	30-40km	45-55km
Max. Speed	33km/h	33km/h	35km/h
Motor	400W	400W	500W
Frame Material	Magnesium alloy		
Brake	Rear disc brake		
Shock absorber-Front	Yes		
Shock absorber-Rear	No		
Tires	10*2.25 10-inch Inflatable tire		
Max.Load	120kg	120kg	120kg
Charging hour	4-4.5h	6.5-7h	6.5-7h
Open Size	1150*540*1180mm		
Folding Size	1060*190*380mm		
N.Weight(kg)	14.5kg	15.7kg	15.9kg
G.Weight (kg)	18.0kg	19.2kg	19.4kg
Package Size	1130*250*440mm		

*** 20GP /40GP/40HQ capacity : 215 / 475/ 580pcs .**





S Series

Model	S5	S6	S7	S8
Battery	48V13AH	48V18AH	48V22AH	48V 26AH
Range	40-55km	55-70km	65-80km	75-90km
Max. Speed	50km/h	50km/h	50km/h	50km/h
Motor(Split Motor)	600W	600W	600W	600W
Frame Material	Aluminium alloy			
Brake	Front & Rear disc brake			
Shock absorber	Front & Rear			
Tires	10inch Air Tyre			
Max.Load	120kg	120kg	120kg	120kg
Charging hour	6.5-7h	9-10h	11-12h	13-14h
Open Size	1245*610*1230mm			
Folding Size	1150*610*525mm			
N.Weight(kg)	22.1kg	22.7kg	23.4kg	24kg
G.Weight (kg)	26.1kg	26.7kg	27.4kg	28kg
Package Size	1190*250*500mm			

*** 20GP /40GP/40HQ capacity : 144 / 324/ 405pcs .**





S Series

Model	S7-S	S8-S	S10-S	S11-S
Battery	48V22AH	48V26AH	60V18AH	60V22.4Ah（LG）
Range	65-80km	75-90km	70-85km	80-100km
Max. Speed	55km/h	55km/h	65km/h	65km/h
Motor(Split Motor)	600W*2	600W*2	1000W*2	1000W*2
Frame Material	Aluminium alloy			
Brake	Front & Rear hydraulic brake			
Shock absorber	Front & Rear			
Tires	10inch Air Tyre			
Max.Load	120kg	120kg	120kg	120kg
Charging hour	11-12h	13-14h	10-12h	11-12h
Open Size	1245*610*1230mm			
Folding Size	1150*610*525mm			
N.Weight(kg)	27.1kg	27.7kg	27kg	28.2kg
G.Weight (kg)	31.1kg	31.7kg	31kg	32.2kg
Package Size	1190*250*500mm			

*** 20GP /40GP/40HQ capacity : 144 / 324/ 405pcs .**

S Series





喷雾式滑板车
SPRAY SCOOTERS

TF卡播放音乐
TF CARD TO PLAY MUSIC



多种颜色可选

A VARIETY OF COLORS ARE AVAILABLE



基本参数：

适合人群：儿童（2-12岁）	轮子材料：PU发光轮
产品类型：滑板车	轮子尺寸：120mm
适合路面：柏油路、水泥路	车身高度：69-92cm
主要材质：塑胶和优质铝型材	最大承重：60kg

Basic Parameters:

For the crowd: Children (2-12 years old)	Wheel material: PU light wheel
Product type: Scooter	Wheel size: 120mm
Suitable for pavement: Asphalt road	Body height: 69-92cm
Main material: Plastic and high quality aluminum profiles	Weight capacity: 60kg

精选优质材料
FEATURED QUALITY MATERIALS



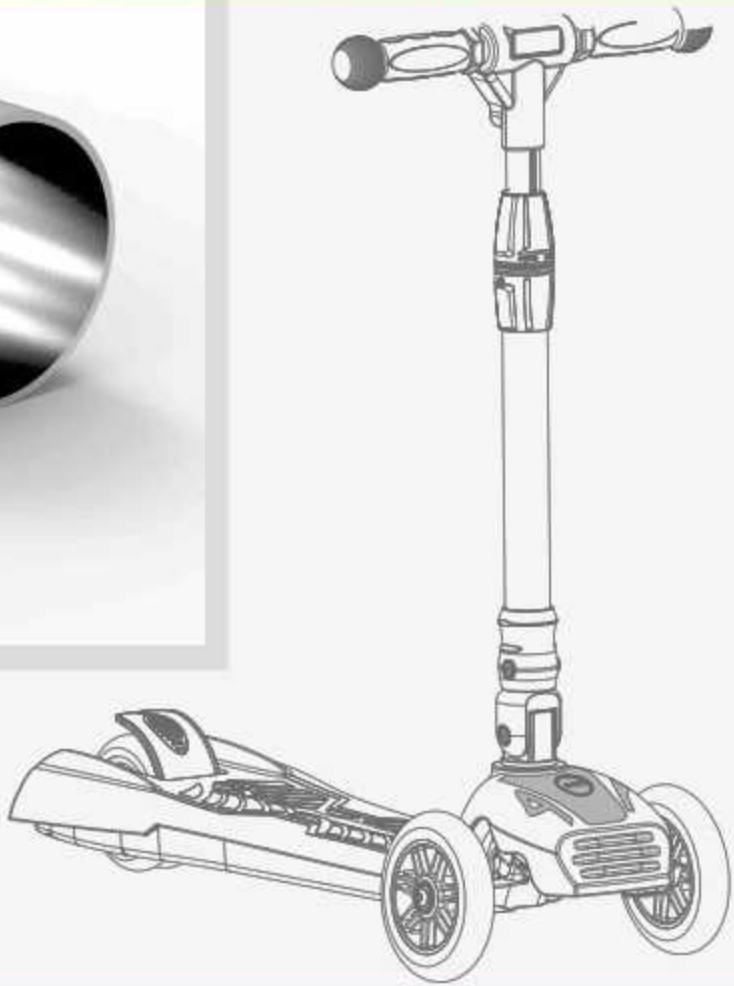

高品质滑板车
HIGH QUALITY SCOOTER

全车采用环保级塑料无毒无害+优质铝型材
结实耐用不生锈，表面阳极氧化处理

The whole car made of environmentally friendly plastic non-toxic
harmless & high-quality aluminum
Strong and durable without rust, surface anodized

三角稳定设计

TRIANGULAR STABLE DESIGN



采用环保级塑料+优质铝型材

Using material of environmentally
friendly plastic &high-quality aluminum

采用三角形稳定设计
超低车身，稳固更安全

Triangular stable design
ultra-low body, stable and more secure

可调节车把
ADJUSTABLE HANDLEBAR



三重保险，升降设计，升降完成后手动紧固
告别锁扣设计，安全无棱角

Triple insurance, lifting design
Manual tightening after lifting is completed
Farewell to thelock design, safe without edges and corners

适合2--12岁儿童
随着儿童的成长调节车身高度

Suitable for children 2-12 years old
the height of the body can be adjusted
with the growth of children.

安全锁扣
SAFETY LOCK

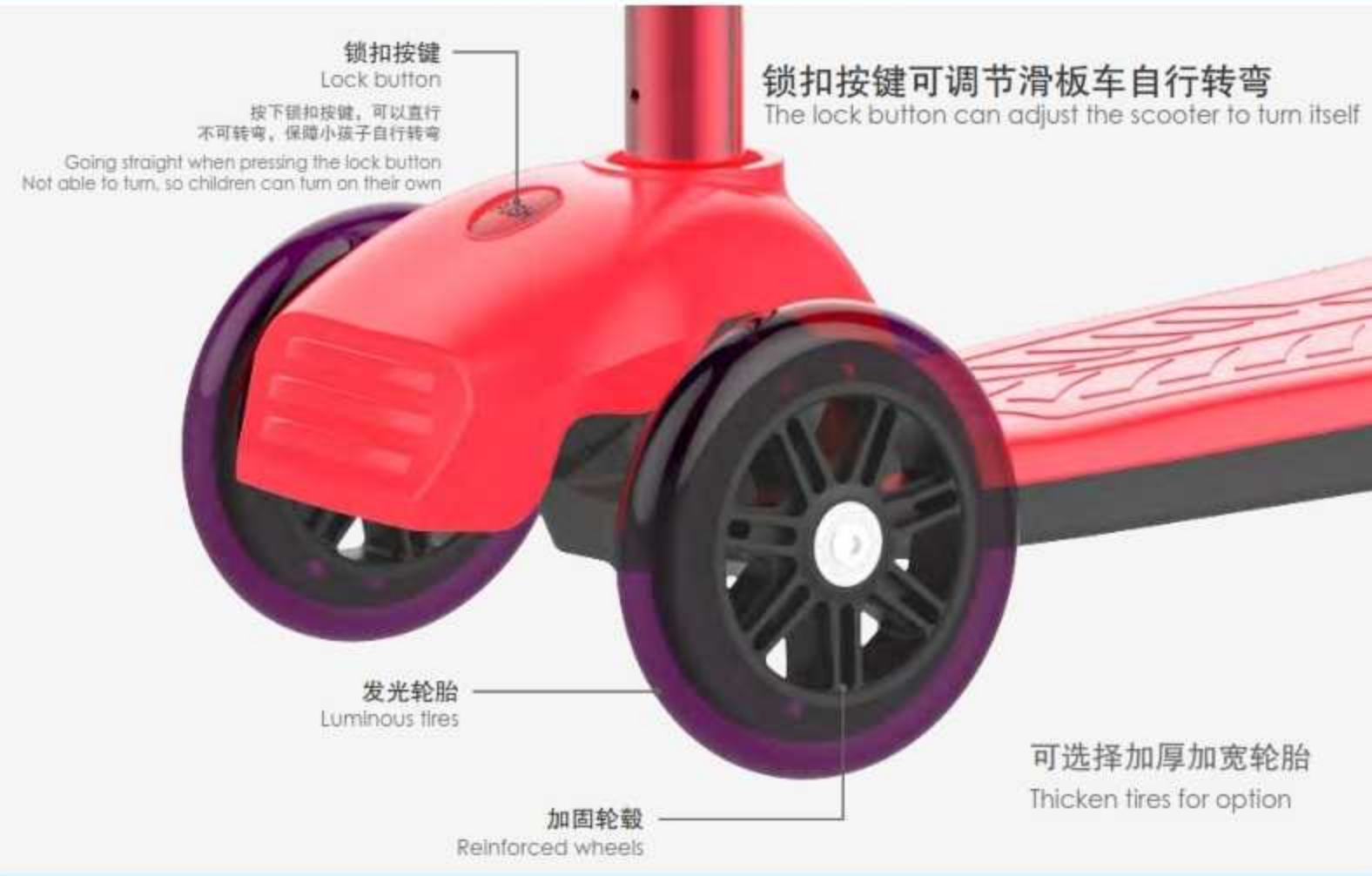

喷雾式设计
SPRAY DESIGN



声音与喷雾结合
产生非一般的视听效果，孩子更加喜欢

Sound combined with spray
resulting in unusual audio-visual effects, making children like it more

注水口
WATER INJECTION

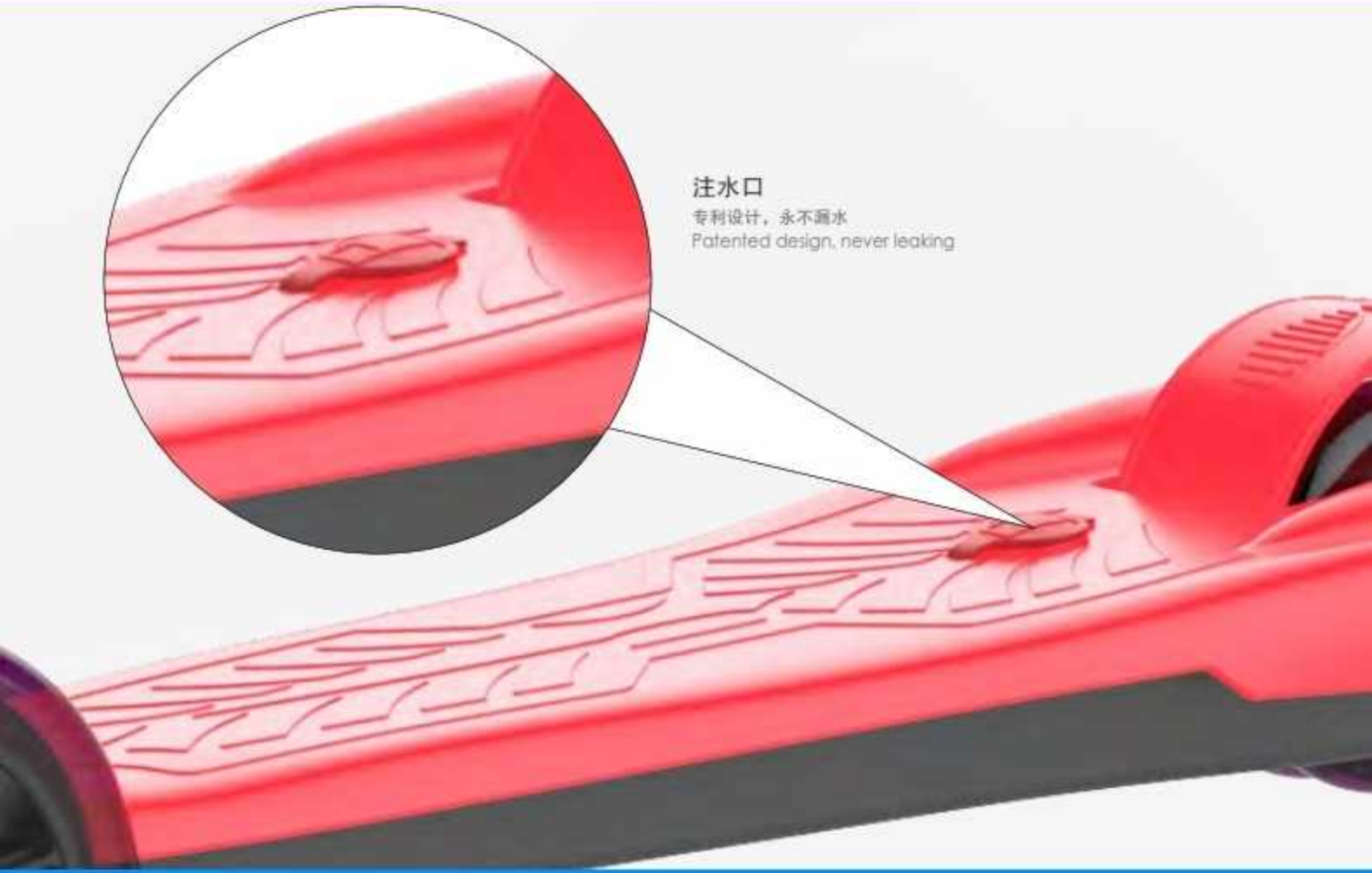

多种颜色任您选择

A VARIETY OF COLORS AVAILABLE












粉色
pink


黄色
yellow










黑色
black


蓝色
blue










绿色
green

包装参数
PACKING PARAMETERS

卡通箱内箱尺寸

长(Length)	宽(Width)	高(Height)	单位(Unit)
665	315	610	mm

20英尺柜装柜数量

{(8x7x3)+(1x7x3)+(8x3)}x4=852PCS

数量：4 台 Quantity: 4 UNIT	净重：14 公斤 Net Weight: 14 KGS	毛重：15.2 公斤 Gross Weight: 15.2 KGS

长（L）x 宽（W）x 高（H）：650x150x350mm

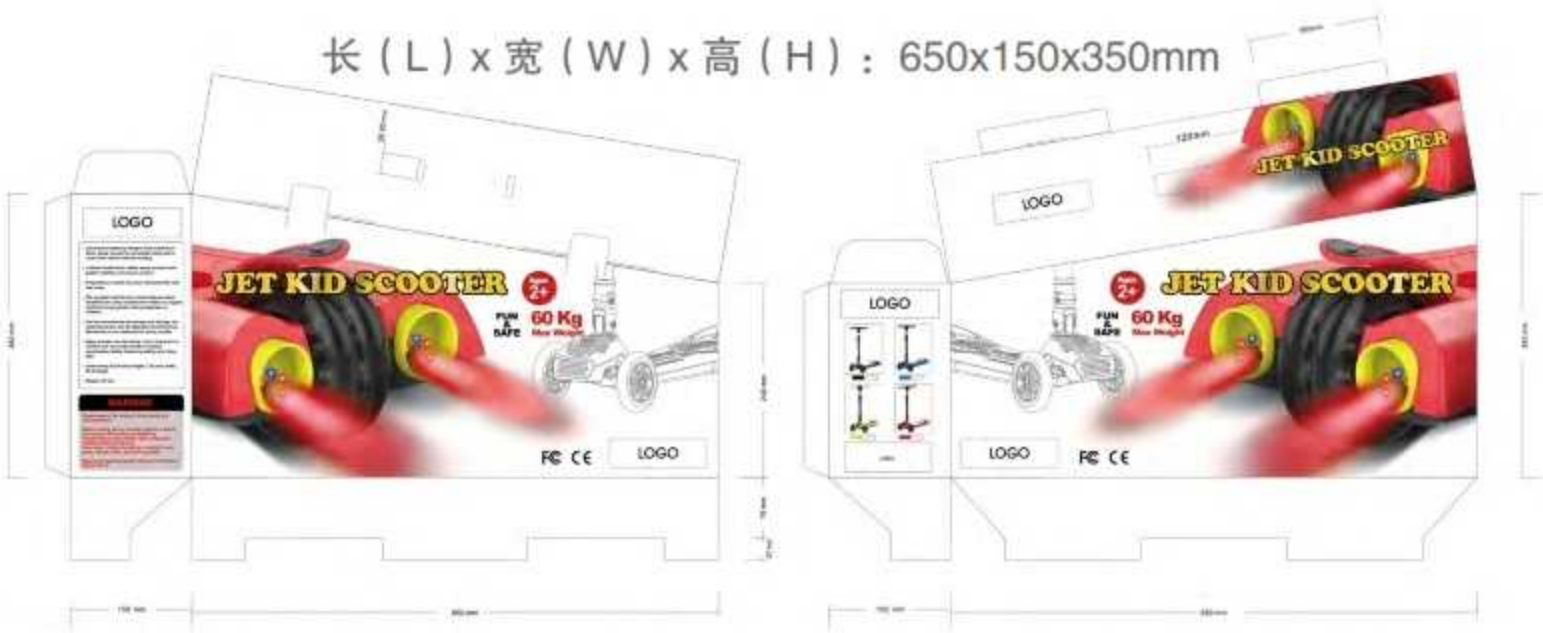

DMB HK Limited
Doing Major Business

ELECTRIC SCOOTER

35/F., Central Plaza, 18 Harbour Road. Wanchai - Hong Kong
Telephone: +852 2824 8140 WhatsApp: +852 6778 9546 Wechat: +86 130 2881 9456 Web: www.dmb-hk.com

MODEL	DESCRIPTION	PICTURE
H2 6 Inch Electric Scooter	Color:Black Material：Aluminium Folded size: 1071*420*315mm Unfolded size: 935*420*1068mm Package size: 1120*200*340mm Battery：4.0/5.0Ah Light: LED light/ rear light Charger Parameters: Input: 100V~240V 50Hz/60Hz Output: 29.4V 1.5A Rated voltage:DC 24V Charging time:4-5 hours Motor Power：250W Wheel size: Front 6inch back 6inch Speed:20K/H Range:6-10KM Max loading: 100KGS Net weight: 8.5KGS Gross Weight:10.5KGS	

H5 6 Inch Electric Scooter	Color:Black Material：Aluminium Folded size: 1000*200*280mm Unfolded size: 1000*370*1110mm Package size: 1115*175*290mm Battery：24V 6.6/8.8Ah Light: Front light/ rear light Charger Parameters: Input: 100V~240V 50Hz/60Hz Output: 29.4V 1.5A Rated voltage:DC 24V Charging time:4-6 hours Motor Power：250W Wheel size: Front 6inch back 6inch Speed:25K/H Range:20-28KM Suspension: Front + back suspension USB charging port available Max loading: 100KGS Net weight: 8.6KGS Gross Weight:10.5KGS	
H6 6 Inch Carbon Fiber Electric Scooter	Color:Black Material：Aluminium Folded size: 1000*200*280mm Unfolded size: 1000*370*1110mm Package size: 1115*175*290mm Battery：36V 6.6/7.8Ah Light: Front light/ rear light Charger Parameters: Input: 100V~240V 50Hz/60Hz Output: 42V 1.5A Rated voltage:DC 36V Charging time:4-6 hours Motor Power：300W Wheel size: Front 6inch back 6inch Speed:25K/H Range:20-28KM USB charging port available Max loading: 100KGS Net weight: 8.6KGS Gross Weight:10.5KGS	

H3 8 Inch Electric Scooter	Color:Black Material：Aluminium Folded size: 165*160*350mm Unfolded size: 1080*160*1150mm Package size: 1230*230*370mm Battery：36V 6.6/7.5Ah Light: Front light/ rear light Charger Parameters: Input: 100V~240V 50Hz/60Hz Output: 42V 1.5A Rated voltage:DC 36V Charging time:4-6 hours Motor Power：350W Wheel size: Front 8inch back 8inch Speed:25K/H Range:20-28KM Suspension: Front + back suspension USB charging port available Max loading: 120KGS Net weight: 12KGS Gross Weight:13.5KGS Solid tire, front motor	
L1 8.5 Inch Electric Scooter	Weight:13.5kg Support:150kg Material: Aluminium Alloy Size:1108*460*1180mm Folding size:1108*460*460mm Pedal width:171mm Climbing:15 degree Max Speed:25km/h Max Distance:20-25km Voltage:36V Wheel Size:8.5" Motor:300W Battery:Lithium battery Battery capacity:7.5Ah Brake: Front E brake/Rear disk brake Charging time:3-5 hours Package：1150*200*540mm 20GP load 220 pcs 40HQ load 600 pcs Air tire, front motor	

L2 10 Inch Electric Scooter	Weight:18kg Support:150kg Material: Aluminium Alloy Size:1183*460*1216mm Folding size:1183*460*498mm Pedal width:210mm Max Speed:25km/h Max distance:40-45km Climbing:15 degree Voltage:36V Wheel Size:10" Motor:350W Battery:Lithium battery Battery capacity:12.5Ah Brake: Front E brake/Rear disk brake Charging time:3-5 hours Package size:1190*220*540mm 20GP load 200 pcs 40HQ load 520 pcs Air tire, front motor	
K1 Kids Balance Scooter	Product Size：51.5*12*38cm (20.27*4.72*15inch) Feature: 2 in 1 balance scooter;Push bike Suitable age: 2-4 years old Suitable Height:85-110cm(33.46-43.3inch) Max weight:25kg(55lbs) Front wheel: Diameter: 228mm; Material:EVA Feature:Provide a smooth ride on any surface Rear Wheel: Diameter:90mm Material EVA Feature: Grip on the road well	
K2 Kids Balance Scooter	Product Size：58.5*10.8*32CM(23.03*4.25*12.6inch) Feature: 2 in 1 balance scooter; Push bike Suitable age: 3~5 years old Suitable height: 95-120CM (37.4-47.24inch) Max loading:25kg(55lbs) Front wheel: Diameter: 228mm; Material:EVA Feature: Provide a smooth ride on any surface Rear Wheel: Diameter:117mm Material:EVA Feature: Grip on the road well	

K3 Kids Balance Bike	Product Size：60*10.5*29CM（23.62*4.13*11.41inch） Features: balance bike Suitable age: 2~5 year old Suitable height: 95-120cm(37.4*47.24inch) Max loading: 35kg(77lbs) Front wheel: Diameter: 228mm Material:EVA Feature: Provide a smooth ride on any surface Rear Wheel: Diameter:117mm Material:EVA Feature: Grip on the road well	
K5 Kids Electric Scooter	Product Size：62*30*74CM（24.4" x 11.8" x 29.1" inch） Features: Electric kids scooter Suitable age:5+ year old Height adjustable :74-88cm Suitable height: 100-150cm(39.37*59.05inch) Max loading: 40kg(88lbs) Front wheel: 5inch flashing wheel , Rear wheel :3.5 inch Rubber motor wheel Battery：15V/1.54 ah 18650lithium battery Motor:120W Max speed :6km/h Range :about 4KM Brake :Rear Food e-brake Feature: flashing wheel , led light up stem and deck	
K6 Kids Electric Scooter	Product Size：68*28*74CM（26.77" x 11.02" x 29.1" inch） Features: Electric kids scooter Suitable age:5+ year old Height adjustable :74-88cm Suitable height: 100-150cm(39.37*59.05inch) Max loading: 40kg(88lbs) Front wheel: 5inch flashing wheel , Rear wheel :3.5 inch Rubber motor wheel Battery：15V/2.5 Ah 18650lithium battery Motor:120W Max speed :6km/h Range :about 6KM Brake :Rear Food e-brake Feature: flashing wheel , led light up stem and deck	

DMB HK Limited
Doing Major Business

FOLDING ELECTRIC SCOOTER

35/F., Central Plaza, 18 Harbour Road. Wanchai - Hong Kong
Telephone: +852 2824 8140 WhatsApp: +852 6778 9546 Wechat: +86 130 2881 9456 Web: www.dmb-hk.com

MODEL	PHOTO	DESCRIPTION	REMARKS
BD-FES001		Motor: 250W, peak 600W. Battery: 36v5.2ah. Charging time: 2 hours. Range: 15-25 km. Speed: low gear 15 km/h, medium gear 25 km/h and high gear 30 km/h. Tire size: 8.5 inches. Maximum load: 120Kg. Package size: 109x21x36cm. Folding size: 113x long, 43x wide and 40 high. Expanded dimensions: 102x in length, 43x in width, and 113 in height Net/Gross weight: 12kg/13kg	
Es2		Motor: 250W, peak 600W. Battery: 36v5.2ah. Charging time: 2 hours. Range: 15-25 km. Speed: low gear 15 km/h, medium gear 25 km/h and high gear 30 km/h. Tire size: 8.5 inches. Maximum load: 120Kg. Package size: 109x21x36cm. Folding size: 113x long, 43x wide and 40 high. Expanded dimensions: 102x in length, 43x in width, and 113 in height Net/Gross weight: 12kg/13kg Support Monitor APP and Bluetooth Scooter Electrico Segway Kickscooter Es2	
BD-FES002		Maximum speed: 25km/h Climbing ability: 20 degrees Maximum load: 120kg Motor power: 250W Battery: 24V/4.4AH or 24V/7.8AH Power indicator: LED light Charging time: 2-4 hours Folding size: 1000x405x235 mm Expanded size: 920x405x1000 mm Size of outer box: 1030x175x260 mm Body height: 100 cm Chassis height: 5cm Pedal height from the ground: 9cm Tire type: solid tire Tire size: 5 inches Encasement items: car body, charger, instructions, installation tools	

DMB HK Limited
Doing Major Business

MONOCYCLE SCOOTER

35/F., Central Plaza, 18 Harbour Road. Wanchai - Hong Kong
Telephone: +852 2824 8140 WhatsApp: +852 6778 9546 Wechat: +86 130 2881 9456 Web: www.dmb-hk.com

MODEL	PHOTO	DESCRIPTION	PACKING
BD-MC001	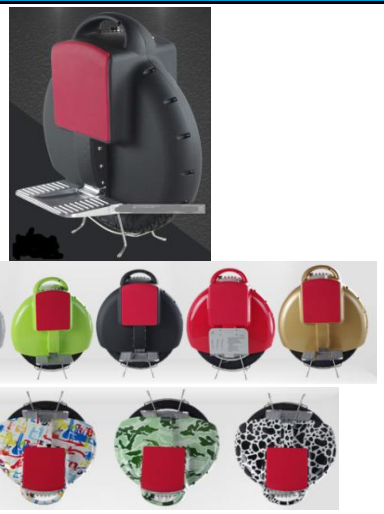	Tire Size: 14inch Battery: 2200mAh/60V Charger: 80V-240V/2A Charging time: 45-100mins Moto Power: 350W Max Speed: 18KM/H Cruising ability: 15-20KM Speed Limited Alarm: 10KM/H Max Load: 120KG Min load: 20KG Temperature: 10/40degree centigrade Service life: 2500 times	Carton Size:46*24*57cm Gross Weight: 11.5KG
BD-MC002		Tire Size: 14inch Battery: 2200mAh/60V Charger: 80V-240V/2A Charging time: 45-100mins Moto Power: 350W Max Speed: 18KM/H Cruising ability: 15-20KM Speed Limited Alarm: 10KM/H Max Load: 120KG Min load: 20KG Temperature: 10/40degree centigrade Service life: 2500 times	Carton Size:46*24*57cm Gross Weight: 12KG

BD-MC003		Tire Size: 14inch Battery: 2200mAh/60V Charger: 80V-240V/2A Charging time: 45-100mins Moto Power: 350W Max Speed: 18KM/H Cruising ability: 15-20KM Speed Limited Alarm: 10KM/H Max Load: 120KG Min load: 20KG Temperature: 10/40degree centigrade Service life: 2500 times	Carton Size:55.5*24.5*45.5cm Gross Weight: 14KG
BD-MC004		Tire Size: 14inch Battery: 2200mAh/60V Charger: 80V-240V/2A Charging time:2-3 hours Moto Power: 350W Max Speed: 18KM/H Cruising ability: 15-20KM Speed Limited Alarm: 10KM/H Max Load: 120KG Min load: 20KG Temperature: 10/40degree centigrade Service life: 2500 times Support: **Flash light at night time** Support: **Bluetooth Music with phone**	Carton Size:51.5*44.5*22.5cm Gross Weight: 14KG

BD-MC004	 	Tire Size: 14inch Battery: 2200mAh/60V Charger: 80V-240V/2A Charging time:2-3 hours Moto Power: **500W** Max Speed: 25KM/H Cruising ability: 35-40KM Max Load: 120KG Min load: 20KG Temperature: 10/40degree centigrade Service life: 2500 times Support: **Flash light at night time** Support: **Bluetooth Music with phone**	Carton Size:51.5*44.5*22.5cm Gross Weight: 14KG
BD-MC005		Tire Size: 14inch Battery: 2200mAh/60V Charger: 80V-240V/2.2A Charging time:2-3 hours Moto Power: **500W** Max Speed: 35KM/H Cruising ability: 35-40KM Max Load: 150KG Min load: 20KG Temperature: 10/40degree centigrade Support: **Flash light at night time** Support: **Bluetooth Music with phone** **Support:RGB Horse Lamp** **Support:USB Charging Port** **Support: Smartphone App Function**	Carton Size:57*46*24cm N.W.:12KG G.W.: 13KG

DMB HK Limited
Doing Major Business

TWO WHEELS BALANCE SCOOTER

35/F., Central Plaza, 18 Harbour Road. Wanchai - Hong Kong
Telephone: +852 2824 8140 WhatsApp: +852 6778 9546 Wechat: +86 130 2881 9456 Web: www.dmb-hk.com

MODEL	PHOTO	DESCRIPTION	PACKING
BD-BC001		Wheel Size : 10.5inch **(LED light+bluetooth+APP)** Power : 350W*2 Volt : 36V / 54V Battery Capacity : 2.6AH/4.0AH Speed : 15 km /h Max Load : 85kg Charge Time : 2~3h	Size: 60x8.5x32 cm G.W.: 13.5 Kg 1pc/ctn
BD-MC002		Wheel Size : 10.5inch **(LED light+bluetooth+APP)** Power : 350W*2 Volt : 36V / 54V Battery Capacity :2.6AH/4.0AH Speed : 15 km /h Max Load : 85kg Charge Time : 2~3h	Size: 60x28.5x39.5 cm G.W.: 14 Kg 1pc/ctn

BD-BC003		Wheel Size : 10inch **(LED light+bluetooth)** Power : 350W*2 Volt : 36V Battery Capacity :2.6AH Speed : 15 km /h Max Load : 85kg Charge Time : 2~3h	Size: 65x32x36.5 cm G.W.: 14.5 Kg 1pc/ctn
			

TWO WHEELS ELECTRIC SCOOTER

PRODUCT	PHOTO	DESCRIPTION			
				BD-X60	BD-X60+ Turbo
BD-X60 Off-Road Electric Scooter	  	Material	Main Material	Magnesium Alloy + Aluminum Alloy + ABS + Rubber	
		Riding Requirements	Suitable Age	12 ~ 50	
			Suitable Height	130 ~ 200CM	
		Main Parameters	Max Speed	20KM/H	
			Max Mileage	35 ~ 40KM	75 ~ 80KM
			Max Load	150KG	
			Min Turning Radius	0°	
			Max Climbing	⩽35	
			Height of Pedal	220mm	
			Max Height of Ground	125mm	
			Tire Size	19 inch	
			Standard Pressure	150kpa	
			Long*Width*High	488 * 836 * 1080 ~ 1480mm (Adustable)	
			Net Weight	36.6KG	39.6KG
			Gross Weight	45.3KG	48.3KG
			Packing Size	91 * 52 * 63CM	
			Working Temperature	-10 ~ +40 ℃	
			Storage Temperature	-20 ~ +50 ℃	
			Waterproof	IP56	
			Begginner Mode	Yes, set via APP	
			Applicable Terrain	Cement Road/Asphalt road/Grass/Gravel Road/Beach	
		Motherboard Parameters		Dual System	
		Battery Parameters	Battery	SAMSUNG 18650 Lithium Ion Battery	
			Rated Voltage	57.6V	
			Max Charging Voltage	67.2V	
			Rated Capacity（Ah)	7.8Ah	15.6Ah (Dual Batteries)
			Intelligent BMS	Overvoltage Protection/ Undervoltage Protection/ Short circuit Protection/ Overheating protection, Automatic sleep/ Wake	
			Max Sustained Discharge Power	1000W	
		Motor Parameters	Motor	Brushless DC Motor	
			Rated Power	1200W * 2 = 2400W	
		Charger Parameters	Input Voltage	100 ~ 240V	
			Output Voltage	67.2V	
			Output Current	2A	3A
			Rated Power	120W	
			Charging Time	3 ~ 4 Hour	4 ~ 5 Hour
			Charging Temperature	0 ~ 40 ℃	
		Operating Mode		Standby mode/Pulling mode/Speed limit driving mode/Normal driving mode/Remote mode/Lock mode	
		Display Panel		6.5' OLED Display/Battery/Speed/Mileage/Lamp/Lock/Bluetooth	
		Light		Front lamp/Ambient light/Left/Right turn light/Brake light/Backup light	
		Wireless Connections		Bluetooth	
		APP		Yes	
		Voice		Yes	
		USB Charging			Yes (5V/1A)
		Bluetooth Music			Yes
		Colour		Black/White	
				20GP: 85pcs	**40HQ:208pcs**

DMB HK Limited
Doing Major Business

KIDS SCOOTERS

35/F., Central Plaza, 18 Harbour Road. Wanchai - Hong Kong
Telephone: +852 2824 8140 WhatsApp: +852 6778 9546 Wechat: +86 130 2881 9456 Web: www.dmb-hk.com

No	ITEM	PICTURE	COLOR	DESCRIPTION	PACKING
1	102-A		Red Pink Blue	1. Music 2. 50mm Big wheels with light 3. Board with light 4. Foot Brake 5. Foldable 6. With inner box	Ctn size :65*48*62cm(0.193m³) Package :6pcs/ctn Net weight :19kg Gross weight: 20kg Loading quantity : 40HQ 2112pcs 20GP 804pcs
2	102-B		Red Pink Yellow Customizable	1. Music 2. 50mm Big wheels with light 3. Board with light 4. Foot Brake 5. Foldable 6. With inner box	Ctn size :65*48*62cm(0.193m³) Package :6pcs/ctn Net weight :20kg Gross weight: 21kg Loading quantity : 40HQ 2112pcs 20GP 804pcs
3	102-C		Red Pink Blue	1. Music 2. 50mm Big wheels with light 3. Board with light 4. Foot Brake 5. Foldable 6. With inner box 7. With basket	Ctn size :65*48*62cm(0.193m³) Package :6pcs/ctn Net weight :21kg Gross weight: 22kg Loading quantity : 40HQ 2112pcs 20GP 804pcs

No	ITEM	PICTURE	COLOR	DESCRIPTION	PACKING
4	103-A		Pink Red Blue Purple	1. Music 2. 50mm Big wheels with light 3. Board with light 4. Foot Brake 5. Foldable 6. With inner box	Ctn size :65*48*62cm(0.193m³) Package :6pcs/ctn Net weight : 20kg Gross weight: 21kg Loading quantity : 40HQ 2112pcs 20GP 804pcs
5	103-B		Pink Red Blue Purple	1. Music 2. 50mm Big wheels with light 3. Board with light 4. Foot Brake 5. Foldable 6. With inner box 7. With seat	Ctn size :65*48*62cm(0.193m³) Package :6pcs/ctn Net weight : 23kg Gross weight: 25kg Loading quantity : 40HQ 2112pcs 20GP 804pcs
6	108-K		Red Blue Black	1. Music 2. 50mm Big wheels with light 3. Board with light 4. Foot Brake 5. Foldable 6. With inner box 7. Painting color	Ctn size :65*48*62cm(0.193m³) Package :6pcs/ctn Net weight : 20kg Gross weight: 21kg Loading quantity : 40HQ 2112pcs 20GP 804pcs
7	106-A		Pink Blue	1. Ordinary wheels 2.Foot Brake 3. Foldable	Ctn size :59*42*49cm(0.121m³) Package :10pcs/ctn Net weight :14.8kg Gross weight: 17.6kg Loading quantity : 40HQ 5610pcs 20GP 2140pcs

No	ITEM	PICTURE	COLOR	DESCRIPTION	PACKING
8	**106-B**		Pink Blue	1. Music 2. PVC wheels with light 3. Foot Brake 4. Foldable 5. Board with light	Ctn size :59*42*49cm(0.121m³) Package :10pcs/ctn Net weight :14.8kg Gross weight: 17.6kg Loading quantity : 40HQ 5610pcs 20GP 2140pcs
9	**108-A**	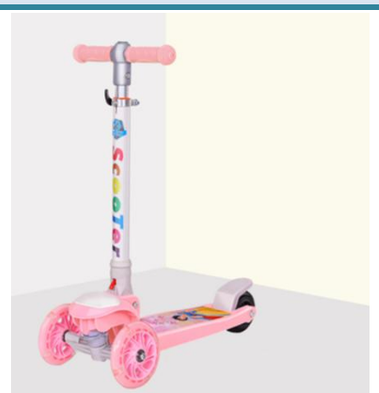	Pink Blue Red	1. Music 2. 26mm PU wheels with light 3. Foot Brake 4. Foldable 5. Board with light 6. With inner box	Ctn size :60*52.5*49cm(0.154m³) Package :6pcs/ctn Net weight :10.8kg Gross weight: 14.1kg Loading quantity : 40HQ 2514pcs 20GP 960pcs
10	**108-C**		Pink Blue Red	1. Music 2. 40mm wheels with light 3. Foot Brake 4. Foldable 5. With inner box	Ctn size :51*52*61cm(0.162m³) Package :6pcs/ctn Net weight :13.6kg Gross weight: 16.4kg Loading quantity : 40HQ 2514pcs 20GP 960pcs
11	**H-9A**		Red Pink Blue Yellow	1. Music , Adjuster of volume 2. 50mm wheels with light 3. Foot Brake 4. Foldable 5. Board with light 6. Inner box	Ctn size :63*47*63cm(0.187m³) Package :6pcs/ctn Net weight :16kg Gross weight: 19kg Loading quantity : 40HQ 2178pcs 20GP 834pcs

No	ITEM	PICTURE	COLOR	DESCRIPTION	PACKING
12	**H-9B**		Red Pink Blue Yellow	1. Music , Adjuster of volume 2. 50mm wheels with light 3. Foot Brake 4. Foldable 5. Board with light 6. Inner box 7. With seat	Ctn size :70*40*62cm(0.174m³) Package :4pcs/ctn Net weight :13kg Gross weight: 16kg Loading quantity : 40HQ 1560pcs 20GP 596pcs
13	**FB102-A**		Pink Blue Green	1. 50mm wheels with light 2. Foot Brake 3. With inner box	Ctn size :63*47*56cm(0.166m³) Package :6pcs/ctn Net weight :14kg Gross weight: 18kg Loading quantity : 40HQ 2454pcs 20GP 936pcs
14	**FB102-B**		Pink Blue Green	1. 50mm wheels with light 2. Foot Brake 3. With inner box 4. With seat	Ctn size :63*47*60cm(0.178m³) Package :6pcs/ctn Net weight :16kg Gross weight: 20kg Loading quantity : 40HQ 2292pcs 20GP 876pcs
15	**FB102-C**		Pink Blue Green	1. 26mm wheels with light 2. Foot Brake 3. With inner box 4. With seat and push bar	Ctn size :63*47*60cm(0.178m³) Package :6pcs/ctn Net weight :20kg Gross weight: 24kg Loading quantity : 40HQ 2292pcs 20GP 876pcs

No	ITEM	PICTURE	COLOR	DESCRIPTION	PACKING
33	**1388-1**		Pink Green Mary red Blue	1. 26mm wheels with light 2. Foot Brake 3. With inner box 4. With seat	Ctn size :58.5*48*56cm(0.157m³) Package :6pcs/ctn Net weight :21.2kg Gross weight: 25kg Loading quantity : 40HQ 2598pcs 20GP 990pcs
34	**1388-2**		Mary red Blue Green	1. 26mm front wheels with light 2. Foot Brake 3. With inner box 4. With seat	Ctn size :58.5*48*56cm(0.157m³) Package :6pcs/ctn Net weight :21.2kg Gross weight: 25kg Loading quantity : 40HQ 2598pcs 20GP 990pcs
35	**1388-3**		Pink Blue Mary red Light blue Green Orange	1. 26mm front wheels with light 2. Foot Brake 3. With inner box 4. With seat	Ctn size :58.5*48*56cm(0.157m³) Package :6pcs/ctn Net weight :21.2kg Gross weight: 25kg Loading quantity : 40HQ 2598pcs 20GP 990pcs
36	**1588-1**		Pink Green Mary red Blue	1. 26mm front wheels with light 2. Foot Brake 3. With inner box 4. With seat and push bar	Ctn size :58.5*48*56cm(0.157m³) Package :6pcs/ctn Net weight :21.2kg Gross weight: 25kg Loading quantity : 40HQ 2598pcs 20GP 990pcs

No	ITEM	PICTURE	COLOR	DESCRIPTION	PACKING
16	**1588-2**		Pink Green Blue	1. 26mm wheels with light 2. Foot Brake 3. With inner box 4. With seat and push bar	Ctn size :58.5*48*56cm(0.157m³) Package :6pcs/ctn Net weight :21.2kg Gross weight: 25kg Loading quantity : 40HQ 2598pcs 20GP 990pcs
37	**1588-3**		Pink Blue Mary red Light blue Green Orange	1. 26mm front wheels with light 2. Foot Brake 3. With inner box 4. With seat and push bar	Ctn size :58.5*48*56cm(0.157m³) Package :6pcs/ctn Net weight :21.2kg Gross weight: 25kg Loading quantity : 40HQ 2598pcs 20GP 990pcs
17	**H-3**		Pink Blue Purple	1. Music 2. 26mm PU wheels with light 3. Foot Brake 4. Foldable 5. Board with light 6. With inner box	Ctn size :63*47*60cm(0.178m³) Package :6pcs/ctn Net weight :16kg Gross weight: 20kg Loading quantity : 40HQ 2292pcs 20GP 876pcs
18	**H-5**		Red Yellow White Pink Light blue	1. Music , Adjuster of volume 2. 50mm wheels with light 3. Foot Brake 4. Foldable 5. Board with light 6. Inner box	Ctn size :69*52*66cm(0.237m³) Package :6pcs/ctn Net weight :22kg Gross weight: 26kg Loading quantity : 40HQ 1716pcs 20GP 654pcs

No	ITEM	PICTURE	COLOR	DESCRIPTION	PACKING
19	**H-7**		Red Blue Pink Light blue Light pink	1. Music 2. 50mm wheels with light 3. Foot Brake 4. Board with light 5. Inner box	Ctn size :64*47*61cm(0.183m³) Package :6pcs/ctn Net weight :18kg Gross weight: 20kg Loading quantity : 40HQ 2226pcs 20GP 852pcs
20	**A-1**		Blue Pink Black Light Blue Green Black	1. Music 2. 50mm wheels with light 3. Foot Brake 4. Foldable 5. Board with light 6. Inner box	Ctn size :69*53*67cm(0.245m³) Package :6pcs/ctn Net weight :19kg Gross weight: 21kg Loading quantity : 40HQ 1662pcs 20GP 636pcs
21	**A-2**		Red Pink Blue Orange Mary red Green black	1. Music 2. 50mm wheels with light 3. Foot Brake 4. Foldable 5. Board with light 6. Inner box	Ctn size :69*53*67cm(0.245m³) Package :6pcs/ctn Net weight :19kg Gross weight: 21kg Loading quantity : 40HQ 1662pcs 20GP 636pcs
22	**A-3**		Red Pink Blue Orange Mary red Green black	1. Music 2. 50mm wheels with light 3. Foot Brake 4. Foldable 5. Board with light 6. Inner box 7. With seat	Ctn size :70*40*62cm(0.174m³) Package :4pcs/ctn Net weight :13kg Gross weight: 16kg Loading quantity : 40HQ 1560pcs 20GP 596pcs

No	ITEM	PICTURE	COLOR	DESCRIPTION	PACKING
23	**588**		Red White Blue	1. Music 2. 50mm wheels with light 3. Foot Brake 4. Foldable 5. Board with light 6. Inner box	Ctn size :66*57*64cm(0.241m³) Package :6pcs/ctn Net weight :21kg Gross weight: 22kg Loading quantity : 40HQ 1692pcs 20GP 642pcs
24	**599**		Red Yellow Black	1. Music 2. 50mm wheels with light 3. Foot Brake 4. Foldable 5. Board with light 6. Inner box	Ctn size :69*57*66cm(0.260m³) Package :6pcs/ctn Net weight :3.5kg Gross weight: 24kg Loading quantity : 40HQ 1566pcs 20GP 600pcs
25	**106A**		Red Yellow Blue	1. 3-Height adjust 2. Front wheels with light 3. Rear silent wheels 4. Foldable 5. With inner box	
26	**106B**	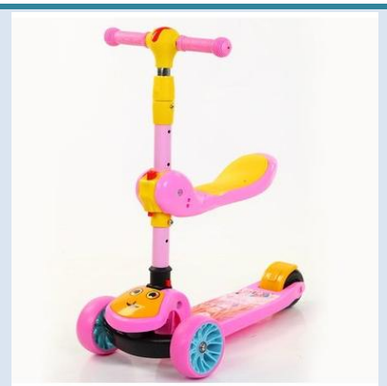	Red Yellow Blue	1. 3-Height adjust 2. Front wheels with light 3. Rear silent wheels 4. Foldable 5. With inner box 6. With foldable seat	

No	ITEM	PICTURE	COLOR	DESCRIPTION	PACKING
38	**328-1**		Red Deep Blue Light Blue Pink	1. Music, Adjuster of volume 2. PU wheels with light 3. Foot Brake 4. Foldable 5. Board with light 6. Inner box	Ctn size :66*48*63cm(0.2m³) Package :6pcs/ctn Net weight :18kg Gross weight: 20kg Loading quantity : 40HQ 2040pcs 20GP 780pcs
39	**328-2**		Mix color	1. Music, Adjuster of volume 2. PU wheels with light 3. Foot Brake 4. Foldable 5. Board with light 6. Inner box	Ctn size :66*48*63cm(0.2m³) Package :6pcs/ctn Net weight :18kg Gross weight: 20kg Loading quantity : 40HQ 2040pcs 20GP 780pcs
40	**326**		Pink Blue	1. Silent wheels 2. Foot Brake 3. Foldable 4. Inner box	Ctn size :64*48*60cm(0.184m³) Package :6pcs/ctn Net weight :16kg Gross weight: 18kg Loading quantity : 40HQ 2214pcs 20GP 846pcs
41	**316**			1. Silent front wheels with light 2. Foot Brake 3. Foldable 4. Inner box	Ctn size :64*48*60cm(0.184m³) Package :6pcs/ctn Net weight :16kg Gross weight: 18kg Loading quantity : 40HQ 2214pcs 20GP 846pcs

No	ITEM	PICTURE	COLOR	DESCRIPTION	PACKING
42	**315**		Red Black Deep Blue Blue Pink	1. Silent wheels with light 2. Foot Brake 3. Foldable 4. Inner box	Ctn size :62*52*62cm(0.2m³) Package :6pcs/ctn Net weight :20kg Gross weight: 22kg Loading quantity : 40HQ 2040pcs 20GP 708pcs
45	**368-1**	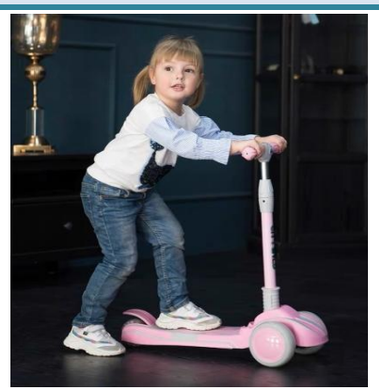	Red Blue Pink Yellow	1. Big wheels with light 2. Foot Brake 3. Foldable 4. With inner box	Ctn size :68*52*66cm(0.233m³) Package :6pcs/ctn Net weight :25kg Gross weight: 26kg Loading quantity : 40HQ 1746pcs 20GP 666pcs
46	**368-2**		Red Blue Pink Yellow	1. Big wheels with light 2. Music, adjuster of volume 2. Foot Brake 3. Foldable 4. With inner box	Ctn size :68*52*66cm(0.233m³) Package :6pcs/ctn Net weight :25kg Gross weight: 26kg Loading quantity : 40HQ 1746pcs 20GP 666pcs
47	**605**		Red Blue Yellow	1.Music .Light 2. Seat with handbar 3.Foldable 4. Wheel with light 5. With inner box	Ctn size :68*48*63cm(0.206m³) Package :6pcs/ctn Net weight :25kg Gross weight: 27kg Loading quantity : 40HQ 1980pcs 20GP 756pcs

No	ITEM	PICTURE	COLOR	DESCRIPTION	PACKING
	501-A		Blue Pink Rose pink Green	1.PU Wheels with Light 2.Foldable 3. Wheel with light 4. With inner box	Ctn size :66*52*60cm(0.206m³) Package :6pcs/ctn Net weight :16kg Gross weight: 18kg Loading quantity : 40HQ 1980pcs 20GP 756pcs
48	**501-B**		Blue Pink Rose pink Green	1.PU Wheels with Light 2.Foldable 3. Wheel with light 4. With inner box 5. Seat	Ctn size :66*52*60cm(0.206m³) Package :6pcs/ctn Net weight :16kg Gross weight: 18kg Loading quantity : 40HQ 1980pcs 20GP 756pcs
49	**501-C**		Blue Pink Rose pink Green	1.PU Wheels with Light 2.Foldable 3. Wheel with light 4. With inner box 5. Seat with handbar	Ctn size :66*52*60cm(0.206m³) Package :6pcs/ctn Net weight :16kg Gross weight: 18kg Loading quantity : 40HQ 1980pcs 20GP 756pcs

KIDS SCOOTERS

MODEL	PHOTO	DESCRIPTION	REMARKS
BD-KS001		Product name: Kids Scooter Graffiti yellow folding hummer wheel One CTN: 6pcs Colors:Black,Blue.Pink CTN Size: 59*47*57CM	
BD-KS002		Product name: Kids Scooter PU flash wheel for folding kids scooter One CTN: 12pcs Colors:Blue,Green,Pink CTN Size: 60*40*57CM	

BD-KS003		Product name: Kids Scooter Music big wheel folding With Flash light One CTN: 8pcs Colors: Blue,Green,Red,Pink. CTN Size: 58*82*32CM	
BD-KS004	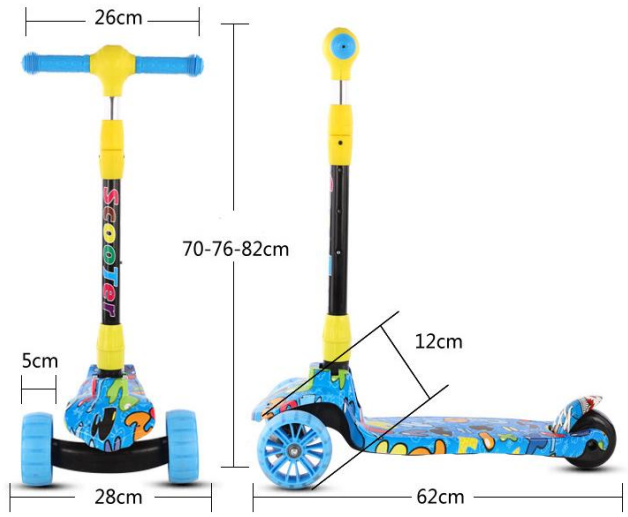	Product name: Kids Scooter Main material: environmental protection PP plastic, thickening pole Main function: exercise balance, one fold, four wheel flash, adjustable height One CTN: 1pcs Colors: Blue,Green,Red,Pink. CTN Size: 30*17*62CM G.W.:3.3KG	

BD-KS005		Product name: Kids Jet Scooter With Music, bluetooth, spray, lithium battery. One CTN: 4PCS CTN Size:69*56*21CM G.W.:18KG Colors: Hip-hop, graffiti, flames, blue stars, liberty.	 
BD-KS006		Product name: Kids Jet Scooter With Music, bluetooth, spray, front flash lights, lithium battery. One CTN: 4PCS CTN Size:67*36*61CM G.W.:20KG Colors: Blue,Orange,Red,Pink.	
BD-KS007		Product name: Kids Scooter 1. Bicycle drive. 2. Cool lighting. 3. Early English teaching function. 4. Dynamic music. 5. Free rotation. 6.Sit or stand. 7.Remote control: 2.4G remote control. 8.Dual Motor Colors： White,Red,Blue,Pink. Max Load: 50KG Product Size:57x 64 x 44CM N.W.:7.3KG G.W.: 15.85KG	 

BD-KS008		Product name: Kids Scooter Music big wheel folding With Flash light One CTN: 6pcs Colors: Blue,Green,Rose Red CTN Size: 76*44*56CM	
BD-KS009		Product name: TwoWheels Kids Scooter Material:All steel 110mm rubber tire Product size: 62X 79 CM One CTN: 6pcs Colors: Blue,Black, Red. CTN Size: 65*44*81CM	
BD-KS010		Product name: Kids Scooter Material:PP + PU + aluminium alloy big wheel folding With Flash light Products size:61.0 * 20.0 c * 26.0 cm One CTN: 6pcs Colors: Blue,Pink, Red CTN Size: 76*44*56CM	

BD-KS011		Product name: Four-wheel Kids scooter Material:High carbon steel T tube, PP plastic and fiber base plate PU Wheel With Flash light Products size:80*25*78 cm One CTN: 6pcs Colors: Blue,Yellow,White CTN Size: 76*44*56CM	
BD-KS100		Product name: Kids scooter with bag. body material:Aluminum alloy The wheels material: PVC Product Size:74*27*60*48cm N.W.:3.7KG Color: Blue,Pink, or other design One CTN Size(10PCS): (1)Bag:50*73*42 CM 8KG (2)Scooter:50*60*42CM 15.5KG Another CTN Size(15PCS): (1)Bag:72*73*43 CM 12KG (2)Scooter:60*65*42CM 24KG	1000